TFT DISPLAY SPECIFICATION

WINSTAR

WINSTAR Display Co.,Ltd.

華凌光電股份有限公司

Winstar Display Co., LTD
華凌光電股份有限公司
WEB: http://www.winstar.com.tw E-mail: sales@winstar.com.tw

SPECIFICATION

CUSTOMER : _____

MODULE NO.: WF28ETLAJDNN0#

APPROVED BY: **(FOR CUSTOMER USE ONLY)**	**PCB VERSION:** **DATA:**

SALES BY	APPROVED BY	CHECKED BY	PREPARED BY
			葉虹蘭
ISSUED DATE: 2017/08/29			

TFT Display Inspection Specification: http://www.winstar.com.tw/technology/download.html

MODLE NO：

DOC. FIRST ISSUE

RECORDS OF REVISION

VERSION	DATE	REVISED PAGE NO.	**SUMMARY**
0	2017/05/11		First issue
A	2017/06/07		Modify LED Life Time.
B	2017/08/22		Modify LED Life Time.
C	2017/08/29		Modify ICC , VBL+ & Viewing angle

Contents

1.Module Classification Information

2.Summary

3.General Specification

4.Absolute Maximum Ratings

5.Electrical Characteristics

6.DC Characteristics

7.AC Characteristics

8.Display Data Format

9.Optical Characteristics

10.Interface

11.Block Diagram

12.Reliability

13.Contour Drawing

14.Other

1.Module Classification Information

W	F	28	E	T	L	A	J	D	N	N	0	#
①	②	③	④	⑤	⑥	⑦	⑧	⑨	⑩	⑪	⑫	⑬

①	Brand：WINSTAR DISPLAY CORPORATION		
②	Display Type：F→TFT Type, J→Custom TFT		
③	Display Size：2.8” TFT		
④	Model serials no.		
⑤	Backlight Type：	F→CCFL, White S→LED, High Light White	T→LED, White Z→Nichia LED, White
⑥	LCD Polarize Type/ Temperature range/ Gray Scale Inversion Direction	A→Transmissive, N.T, IPS TFT C→Transmissive, N. T, 6:00 ; F→Transmissive, N.T,12:00 ; I→Transmissive, W. T, 6:00 K→Transflective, W.T,12:00 L→Transmissive, W.T,12:00 N→Transmissive, Super W.T, 6:00	Q→Transmissive, Super W.T, 12:00 R→Transmissive, Super W.T, O-TFT V→Transmissive, Super W.T, VA TFT W→Transmissive, Super W.T, IPS TFT X→Transmissive, W.T, VA TFT Y→Transmissive, W.T, IPS TFT Z→Transmissive, W.T, O-TFT
⑦	A：TFT LCD B：TFT+SCREW HOLES+CONTROL BOARD C：TFT+ SCREW HOLES +A/D BOARD D：TFT+ SCREW HOLES +A/D BOARD+CONTROL BOARD E：TFT+ SCREW HOLES +POWER BOARD		F：TFT+CONTROL BOARD G：TFT+ SCREW HOLES H：TFT+D/V BOARD I：TFT+ SCREW HOLES +D/V BOARD J：TFT+POWER BD

⑧ Resolution:

A	128160	B	320234	C	320240	D	480234	E	480272	F	640480
G	800480	H	1024600	I	320480	J	240320	K	800600	L	240400
M	1024768	N	128128	P	1280800	Q	480800	R	640320	S	480128
T	800320	U	8001280	**V**	176220	W	1280398	X	1024250	Y	1920720
Z	800200	2	1024324	3	7201280	4	19201200	5	1366768	6	1280320

⑨ D: Digital L：LVDS M:MIPI

⑩ Interface:

N	Without control board	A	8Bit	B	16Bit	H	HDMI
I	I2C Interface	R	RS232	S	SPI Interface	U	USB

⑪ TS:

N	Without TS	T	Resistive touch panel	C	Capacitive touch panel (G-F-F)
G	Capacitive touch panel (G-G)	C1	Capacitive touch panel (G-F-F)+OCA		
C2	Capacitive touch panel (G-F-F)+OCR	G1	Capacitive touch panel (G-G)+OCA		
G2	Capacitive touch panel (G-G)+OCR	B	CTP+GG+USB		

⑫	Version: X:Raspberry pi	
⑬	Special Code	#:Fit in with ROHS directive regulations

2.Summary

TFT 2.8”is a TN transmissive type color active matrix TFT liquid crystal display that use amorphous silicon TFT as switching devices. This module is a composed of a TFT_LCD module, It is usually designed for industrial application and this module follows RoHs.

3.General Specifications

Item	Dimension	Unit
Size	2.8”	
Dot Matrix	240 x RGB x 320(TFT)	dots
Module dimension	50.0(W) x 69.2(H) x 2.3(D)	mm
Active area	43.2 x 57.6	mm
Dot pitch	0.06 x 0.18	mm
LCD type	TFT, Normally White, Transmissive	
View Direction	6 o’clock	
Gray Scale Inversion Direction	12 o’clock	
Aspect Ratio	Portrait	
Backlight Type	LED,Normally White	
With /Without TP	Without TP	
Surface	Glare	

*Color tone slight changed by temperature and driving voltage.

4.Absolute Maximum Ratings

Item	Symbol	Min	Typ	Max	Unit
Operating Temperature	TOP	-20	—	+70	℃
Storage Temperature	TST	-30	—	+80	℃

Note: Device is subject to be damaged permanently if stresses beyond those absolute maximum ratings listed above

1. Temp. ≦40℃, 90% RH MAX. Temp.＞40℃, Absolute humidity shall be less than 90% RH at 40℃

5.Electrical Characteristics

5.1. Operating conditions:

Item	Symbol	Condition	Min	Typ	Max	Unit
Supply Voltage For Analog	VCI	—	2.5		3.3	V
Supply Voltage For Logic	IOVCC		1.65		3.3	V
Supply Current For LCM	ICC	—	—	5	7.5	mA

5.2. LED driving conditions

Parameter	Symbol	Min.	Typ.	Max.	Unit	Remark
LED current		-	80	-	mA	
Power Consumption		224	256	272	mW	
LED voltage	VBL+	2.9	3.2	3.4	V	Note 1
LED Life Time		-	30,000	-	Hr	Note 2,3,4

Note 1 : There are 1 Groups LED

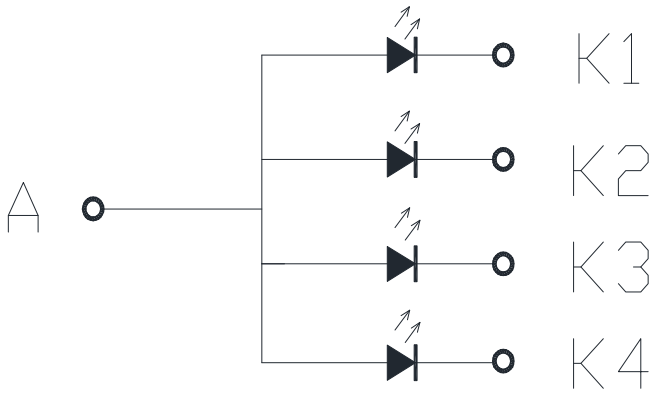

Note 2 : Ta = 25 ℃
Note 3 : Brightness to be decreased to 50% of the initial value
Note 4 : The single LED lamp case

6.DC CHARATERISTICS

Parameter	Symbol	Rating			Unit	Condition
		Min	Typ	Max		
Low level input voltage	V_{IL}	0	-	0.3VCC	V	
High level input voltage	V_{IH}	0.7VCC	-	VCC	V	

7.AC Characteristics

7.1. 8080 Series MCU Parallel Interface Characteristics: 18/16/9/8-bit Bus

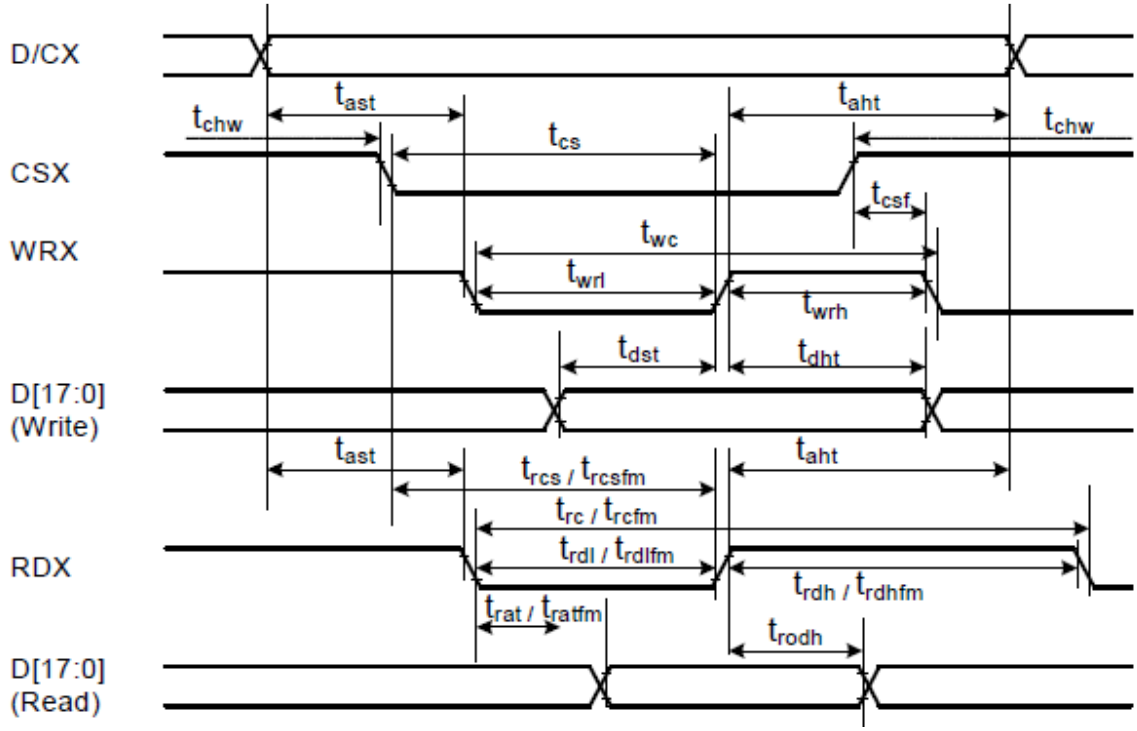

Signal	Symbol	Parameter	min	max	Unit	Description
DCX	tast	Address setup time	0	-	ns	
	taht	Address hold time (Write/Read)	0	-	ns	
CSX	tchw	CSX "H" pulse width	0	-	ns	
	tcs	Chip Select setup time (Write)	15	-	ns	
	trcs	Chip Select setup time (Read ID)	45	-	ns	
	trcsfm	Chip Select setup time (Read FM)	355	-	ns	
	tcsf	Chip Select Wait time (Write/Read)	10	-	ns	
WRX	twc	Write cycle	66	-	ns	
	twrh	Write Control pulse H duration	15	-	ns	
	twrl	Write Control pulse L duration	15	-	ns	
RDX (FM)	trcfm	Read Cycle (FM)	450	-	ns	
	trdhfm	Read Control H duration (FM)	90	-	ns	
	trdlfm	Read Control L duration (FM)	355	-	ns	
RDX (ID)	trc	Read cycle (ID)	160	-	ns	
	trdh	Read Control pulse H duration	90	-	ns	
	trdl	Read Control pulse L duration	45	-	ns	
D[17:0], D[15:0], D[8:0], D[7:0]	tdst	Write data setup time	10	-	ns	For maximum CL=30pF For minimum CL=8pF
	tdht	Write data hold time	10	-	ns	
	trat	Read access time	-	40	ns	
	tratfm	Read access time	-	340	ns	
	trod	Read output disable time	20	80	ns	

Note: Ta = -30 to 70 °C, VDDI=1.65V to 3.3V, VCI=2.5V to 3.3V, VSS=0V

CSX timings :

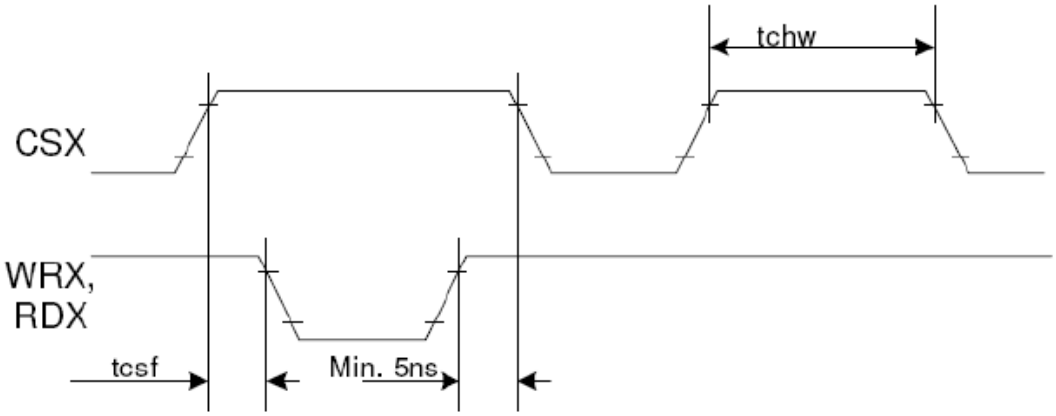

Note: Logic high and low levels are specified as 30% and 70% of VDDI for Input signals.

Write to read or read to write timings:

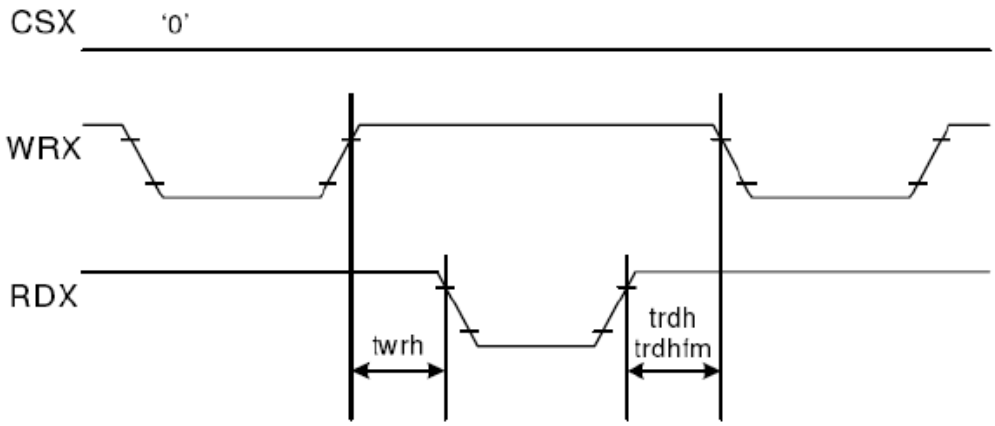

Note: Logic high and low levels are specified as 30% and 70% of VDDI for Input signals.

7.2. Interface Pixel Format

3Ah	PIXSET (Pixel Format Set)												
	D/CX	RDX	WRX	D17-8	D7	D6	D5	D4	D3	D2	D1	D0	HEX
Command	0	1	↑	XX	0	0	1	1	1	0	1	0	3Ah
Parameter	1	1	↑	XX	0	DPI [2:0]			0	DBI [2:0]			66

Description

This command sets the pixel format for the RGB image data used by the interface. DPI [2:0] is the pixel format select of RGB interface and DBI [2:0] is the pixel format of MCU interface. If a particular interface, either RGB interface or MCU interface, is not used then the corresponding bits in the parameter are ignored. The pixel format is shown in the table below.

DPI [2:0]			RGB Interface Format
0	0	0	Reserved
0	0	1	Reserved
0	1	0	Reserved
0	1	1	Reserved
1	0	0	Reserved
1	0	1	16 bits / pixel
1	1	0	18 bits / pixel
1	1	1	Reserved

DBI [2:0]			MCU Interface Format
0	0	0	Reserved
0	0	1	Reserved
0	1	0	Reserved
0	1	1	Reserved
1	0	0	Reserved
1	0	1	16 bits / pixel
1	1	0	18 bits / pixel
1	1	1	Reserved

If using RGB Interface must selection serial interface.

X = Don't care

7.3. Reset Timing

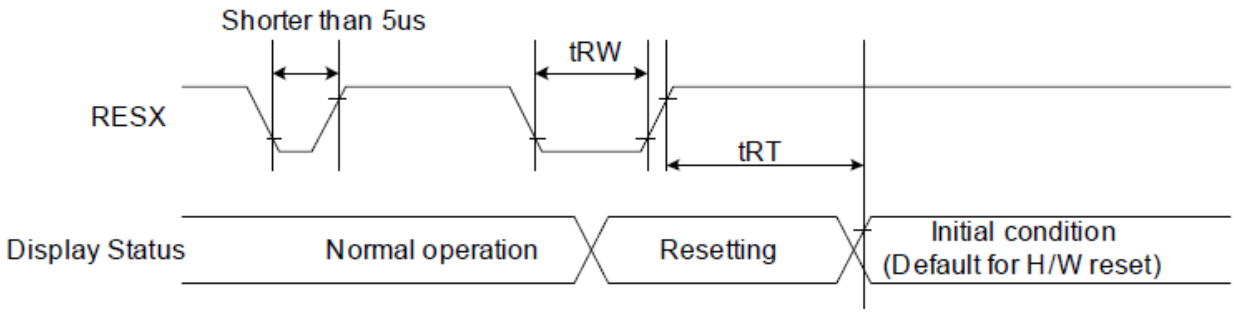

Signal	Symbol	Parameter	Min	Max	Unit
RESX	tRW	Reset pulse duration	10		us
	tRT	Reset cancel		5 (Note 1, 5)	ms
				120 (Note 1, 6, 7)	

VDDI=1.65 to 3.3V, VDD=2.4 to 3.3V, AGND=DGND=0V, Ta=-30 ~ 70 ℃

Notes:

1. The reset cancel includes also required time for loading ID bytes, VCOM setting and other settings from NVM (or similar device) to registers. This loading is done every time when there is HW reset cancel time (tRT) within 5 ms after a rising edge of RESX.
2. Spike due to an electrostatic discharge on RESX line does not cause irregular system reset according to the table below:

RESX Pulse	Action
Shorter than 5us	Reset Rejected
Longer than 10us	Reset
Between 5us and 10us	Reset starts

3. During the Resetting period, the display will be blanked (The display is entering blanking sequence, which maximum time is 120 ms, when Reset Starts in Sleep Out –mode. The display remains the blank state in Sleep In –mode.) and then return to Default condition for Hardware Reset.
4. Spike Rejection also applies during a valid reset pulse as shown below:

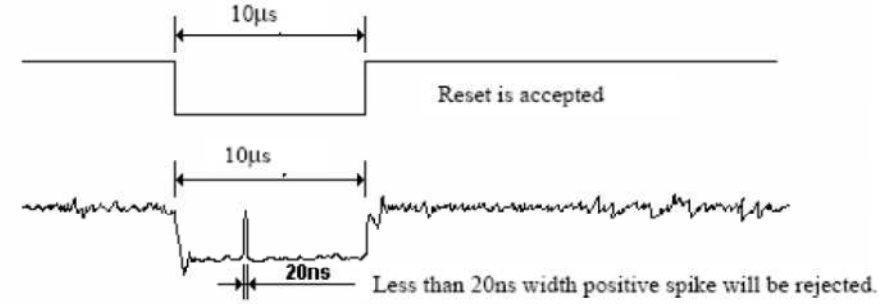

5. When Reset applied during Sleep In Mode.
6. When Reset applied during Sleep Out Mode.
7. It is necessary to wait 5msec after releasing RESX before sending commands. Also Sleep Out command cannot be sent for 120msec.

8.Display Data Format

8.1. 8-bit Parallel MCU Interface

The 8080-Ⅰ system 8-bit parallel bus interface of ILI9341V can be used by setting external pin as IM [3:0] to“0000”.The following shown figure is the example of interface with 8080-Ⅰ MCU system interface.

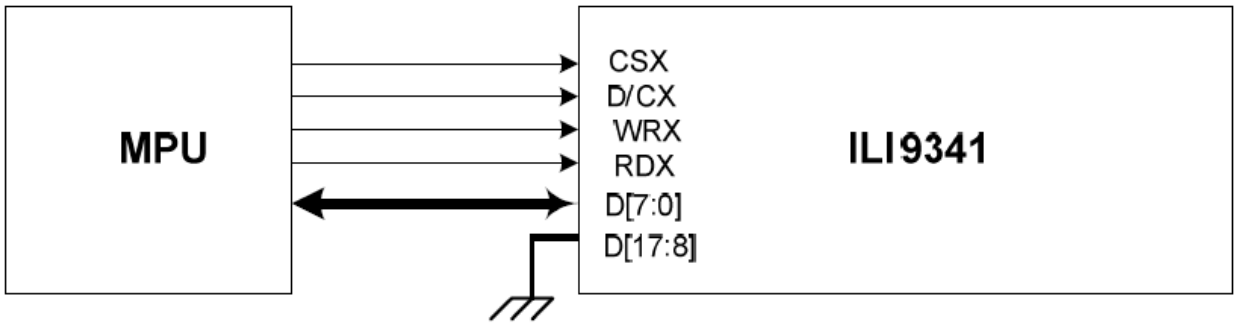

Different display data formats are available for two color depths supported by listed below.
- 65K-Colors, RGB 5, 6, 5 -bits input data.
- 262K-Colors, RGB 6, 6, 6 -bits input data.

65K color: 16-bit/pixel (RGB 5-6-5 bits input)

One pixel (3 sub-pixels) display data is sent by 2 byte transfers when DBI [2:0] bits of 3Ah register are set to
“101”.

Count	0	1	2	3	4	…	477	478	479	480
D/CX	0	1	1	1	1	…	1	1	1	1
D7	C7	0R4	0G2	1R4	1G2	…	238R4	238G2	239R4	239G2
D6	C6	0R3	0G1	1R3	1G1	…	238R3	238G1	239R3	239G1
D5	C5	0R2	0G0	1R2	1G0	…	238R2	238G0	239R2	239G0
D4	C4	0R1	0B4	1R1	1B4	…	238R1	238B4	239R1	239B4
D3	C3	0R0	0B3	1R0	1B3	…	238R0	238B3	239R0	239B3
D2	C2	0G5	0B2	1G5	1B2	…	238G5	238B2	239G5	239B2
D1	C1	0G4	0B1	1G4	1B1	…	238G4	238B1	239G4	239B1
D0	C0	0G3	0B0	1G3	1B0	…	238G3	238B0	239G3	239B0

262K color: 18-bit/pixel (RGB 6-6-6 bits input)

One pixel (3 sub-pixels) display data is sent by 3 bytes transfer when DBI [2:0] bits of 3Ah register are set to
“110”.

Count	0	1	2	3	…	718	719	720
D/CX	0	1	1	1	…	1	1	1
D7	C7	0R5	0G5	0B5	…	239R5	239G5	239B5
D6	C6	0R4	0G4	0B4	…	239R4	239G4	239B4
D5	C5	0R3	0G3	0B3	…	239R3	239G3	239B3
D4	C4	0R2	0G2	0B2	…	239R2	239G2	239B2
D3	C3	0R1	0G1	0B1	…	239R1	239G1	239B1
D2	C2	0R0	0G0	0B0	…	239R0	239G0	239B0
D1	C1				…			
D0	C0				…			

8.2. 16-bit Parallel MCU Interface

The 8080-Ⅰ system 16-bit parallel bus interface of ILI9341V can be selected by setting hardware pin IM[3:0] to“0001”.The following shown figure is the example of interface with 8080-Ⅰ MCU system interface.

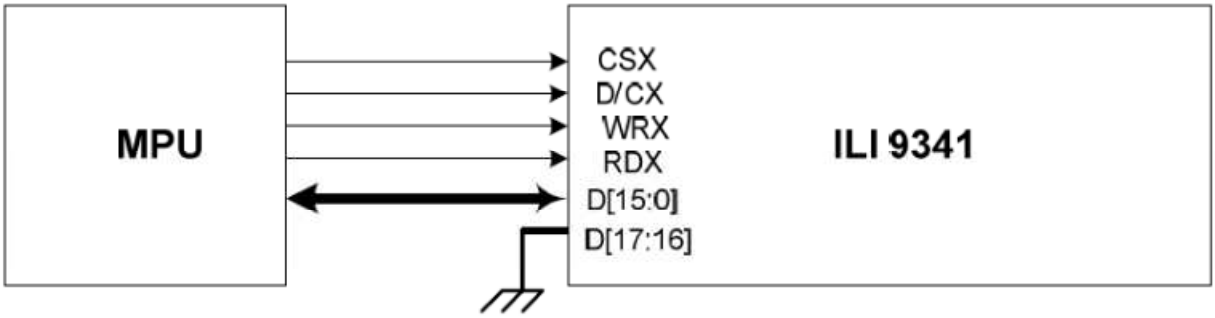

Different display data format is available for two colors depth supported by listed below.
- 65K-Colors, RGB 5, 6, 5 -bits input data.
- 262K-Colors, RGB 6, 6, 6 -bits input data.

65K color: 16-bit/pixel (RGB 5-6-5 bits input)

One pixel (3 sub-pixels) display data is sent by 1 transfer when DBI [2:0] bits of 3Ah register are set to “101”.

Count	0	1	2	3	…	238	239	240
D/CX	0	1	1	1	…	1	1	1
D15		0R4	1R4	2R4	…	237R4	238R4	239R4
D14		0R3	1R3	2R3	…	237R3	238R3	239R3
D13		0R2	1R2	2R2	…	237R2	238R2	239R2
D12		0R1	1R1	2R1	…	237R1	238R1	239R1
D11		0R0	1R0	2R0	…	237R0	238R0	239R0
D10		0G5	1G5	2G5	…	237G5	238G5	239G5
D9		0G4	1G4	2G4	…	237G4	238G4	239G4
D8		0G3	1G3	2G3	…	237G3	238G3	239G3
D7	C7	0G2	1G2	2G2	…	237G2	238G2	239G2
D6	C6	0G1	1G1	2G1	…	237G1	238G1	239G1
D5	C5	0G0	1G0	2G0	…	237G0	238G0	239G0
D4	C4	0B4	1B4	2B4	…	237B4	238B4	239B4
D3	C3	0B3	1B3	2B3	…	237B3	238B3	239B3
D2	C2	0B2	1B2	2B2	…	237B2	238B2	239B2
D1	C1	0B1	1B1	2B1	…	237B1	238B1	239B1
D0	C0	0B0	1B0	2B0	…	237B0	238B0	239B0

262K color: 18-bit/pixel (RGB 6-6-6 bits input)

One pixel (3 sub-pixels) display data is sent by 2 transfers when DBI [2:0] bits of 3Ah register are set to “110”.

MDT[1:0]=”00”

Count	0	1	2	3	…	358	359	360
D/CX	0	1	1	1	…	1	1	1
D15		0R5	0B5	1G5	…	238R5	238B5	239G5
D14		0R4	0B4	1G4	…	238R4	238B4	239G4
D13		0R3	0B3	1G3	…	238R3	238B3	239G3
D12		0R2	0B2	1G2	…	238R2	238B2	239G2
D11		0R1	0B1	1G1	…	238R1	238B1	239G1
D10		0R0	0B0	1G0	…	238R0	238B0	239G0
D9					…			
D8					…			
D7	C7	0G5	1R5	1B5	…	238G5	239R5	239B5
D6	C6	0G4	1R4	1B4	…	238G4	239R4	239B4
D5	C5	0G3	1R3	1B3	…	238G3	239R3	239B3
D4	C4	0G2	1R2	1B2	…	238G2	239R2	239B2
D3	C3	0G1	1R1	1B1	…	238G1	239R1	239B1
D2	C2	0G0	1R0	1B0	…	238G0	239R0	239B0
D1	C1				…			
D0	C0				…			

MDT[1:0]=”01”

Count	0	1	2	3		…	357	358	479	480
D/CX	0	1	1	1		…		1	1	1
D15		0R5	0B5	1R5	1B5	…	238R5	238B5	239R5	239B5
D14		0R4	0B4	1R4	1B4	…	238R4	238B4	239R4	239B4
D13		0R3	0B3	1R3	1B3	…	238R3	238B3	239R3	239B3
D12		0R2	0B2	1R2	1B2	…	238R2	238B2	239R2	239B2
D11		0R1	0B1	1R1	1B1	…	238R1	238B1	239R1	239B1
D10		0R0	0B0	1R0	1B0	…	238R0	238B0	239R0	239B0
D9						…				
D8						…				
D7	C7	0G5		1G5		…	238G5		239G5	
D6	C6	0G4		1G4		…	238G4		239G4	
D5	C5	0G3		1G3		…	238G3		239G3	
D4	C4	0G2		1G2		…	238G2		239G2	
D3	C3	0G1		1G1		…	238G1		239G1	
D2	C2	0G0		1G0		…	238G0		239G0	
D1	C1					…				
D0	C0					…				

MDT[1:0]=”10”

Count	0	1	2	3		…	357	358	479	480
D/CX	0	1	1	1		…		1	1	1
D15		0R5	0B1	1R5	1B1	…	238R5	238B1	239R5	239B1
D14		0R4	0B0	1R4	1B0	…	238R4	238B0	239R4	239B0
D13		0R3		1R3		…	238R3		239R3	
D12		0R2		1R2		…	238R2		239R2	
D11		0R1		1R1		…	238R1		239R1	
D10		0R0		1R0		…	238R0		239R0	
D9		0G5		1G5		…	238G5		239G5	
D8		0G4		1G4		…	238G4		239G4	
D7	C7	0G3		1G3		…	238G3		239G3	
D6	C6	0G2		1G2		…	238G2		239G2	
D5	C5	0G1		1G1		…	238G1		239G1	
D4	C4	0G0		1G0		…	238G0		239G0	
D3	C3	0B5		1B5		…	238B5		239B5	
D2	C2	0B4		1B4		…	238B4		239B4	
D1	C1	0B3		1B3		…	238B3		239B3	
D0	C0	0B2		1B2		…	238B2		239B2	

MDT[1:0]=”11”

Count	0	1	2	3		…	357	358	479	480
D/CX	0	1	1	1		…		1	1	1
D15			0R3		1R3	…		238R3		239R3
D14			0R2		1R2	…		238R2		239R2
D13			0R1		1R1	…		238R1		239R1
D12			0R0		1R0	…		238R0		239R0
D11			0G5		1G5	…		238G5		239G5
D10			0G4		1G4	…		238G4		239G4
D9			0G3		1G3	…		238G3		239G3
D8			0G2		1G2	…		238G2		239G2
D7	C7		0G1		1G1	…		238G1		239G1
D6	C6		0G0		1G0	…		238G0		239G0
D5	C5		0B5		1B5	…		238B5		239B5
D4	C4		0B4		1B4	…		238B4		239B4
D3	C3		0B3		1B3	…		238B3		239B3
D2	C2		0B2		1B2	…		238B2		239B2
D1	C1	0R5	0B1	1R5	1B1	…	238R5	238B1	239R5	239B1
D0	C0	0R4	0B0	1R4	1B0	…	238R4	238B0	239R4	239B0

9.Optical Characteristics

Item		Symbol	Condition.	Min	Typ.	Max.	Unit	Remark
Response time		Tr	θ=0°、Φ=0°	-	4	-	ms	Note 3,5
		Tf		-	12	-	ms	
Contrast ratio		CR	At optimized viewing angle	-	500	-	-	Note 4,5
Color Chromaticity	White	Wx	θ=0°、Φ=0	0.253	0.303	0.353		Note 2,6,7
		Wy		0.265	0.325	0.385		
Viewing angle (Gray Scale Inversion Direction)	Hor.	ΘR	CR≧10		45	-	Deg.	Note 1
		ΘL			45	-		
	Ver.	ΦT			50	-		
		ΦB			20	-		
Brightness		-	-	400	500	-	cd/m^2	Center of display

Ta=25±2℃

Note 1: Definition of viewing angle range

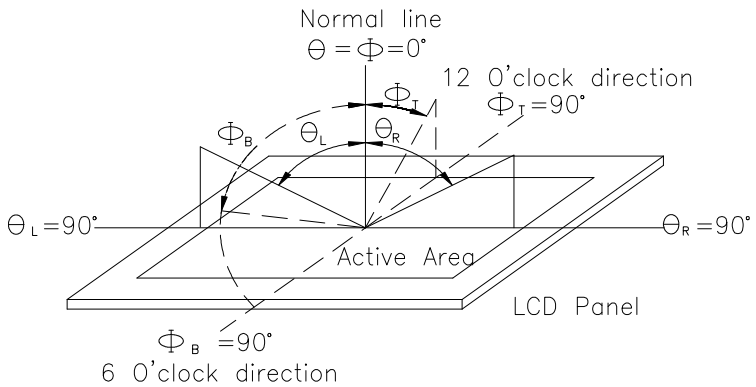

Fig. 9.1. Definition of viewing angle

Note 2: Test equipment setup:

After stabilizing and leaving the panel alone at a driven temperature for 10 minutes, the measurement should be executed. Measurement should be executed in a stable, windless, and dark room. Optical specifications are measured by Topcon BM-7 or BM-5 luminance meter 1.0°field of view at a distance of 50cm and normal direction.

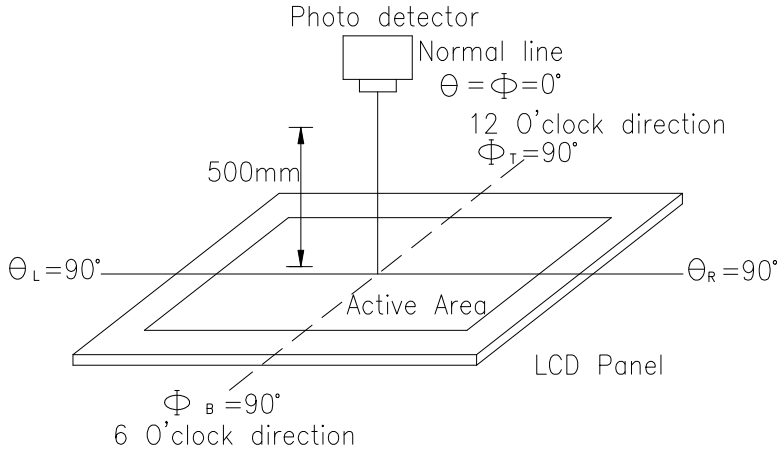

Fig. 9.2. Optical measurement system setup

Note 3: Definition of Response time:
The response time is defined as the LCD optical switching time interval between “White” state and “Black” state. Rise time, Tr, is the time between photo detector output intensity changed from 90%to 10%. And fall time, Tf, is the time between photo detector output intensity changed from 10%to 90%

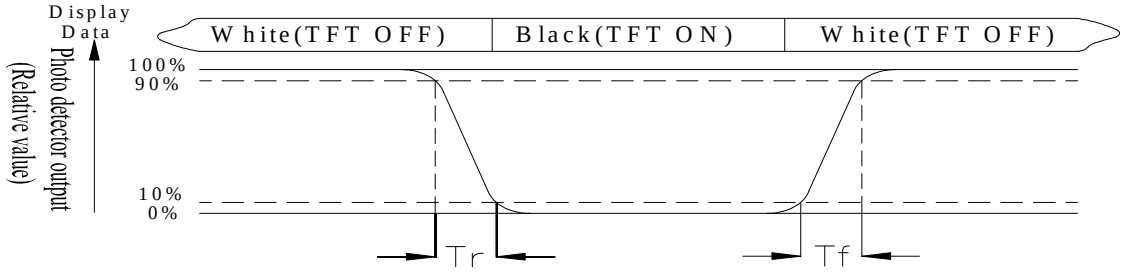

Note 4: Definition of contrast ratio:
The contrast ratio is defined as the following expression.

$$\text{Contrast ratio (CR)} = \frac{\text{Luminance measured when LCD on the "White" state}}{\text{Luminance measured when LCD on the "Black" state}}$$

Note 5: White Vi = $V_{i50} \pm 1.5V$
Black Vi = $V_{i50} \pm 2.0V$
“±” means that the analog input signal swings in phase with VCOM signal.
“±” means that the analog input signal swings out of phase with VCOM signal.
The 100% transmission is defined as the transmission of LCD panel when all the input terminals of module are electrically opened.

Note 6: Definition of color chromaticity (CIE 1931)
Color coordinates measured at the center point of LCD

Note 7: Measured at the center area of the panel when all the input terminals of LCD panel are electrically opened.

10.Interface

10.1. LCM PIN Definition

NO	Symbol	Function	I/O
1~4	DB8~DB11	Data bus	I/O
5	GND	Ground	P
6	IOVCC	power supply	P
7	/CS	Chip select signal.	I
8	RS	register select	I
9	/WR	Write data when WRX is Low.	I
10	/RD	Read strobe signal. Read out data when RDX is Low.	I
11	GND	Ground	P
12	NC	No connection	-
13	NC	No connection	-
14	NC	No connection	-
15	NC	No connection	-
16	LEDA	Anode of LED backlight.	P
17~20	LEDK1~4	Cathode of LED backlight.	P
21	IM0	IM0=0 8Bit DB8-15; IM0=1 16Bit DB0-DB15;	P
22	DB12	Data bus	I/O
23~30	DB0~DB7	Data bus	I/O
31	/RESET	System reset pin.	I
32~33	VCI	power supply	P
34	GND	Ground	P
35~37	DB13~DB15	Data bus	I/O

11.Block Diagram

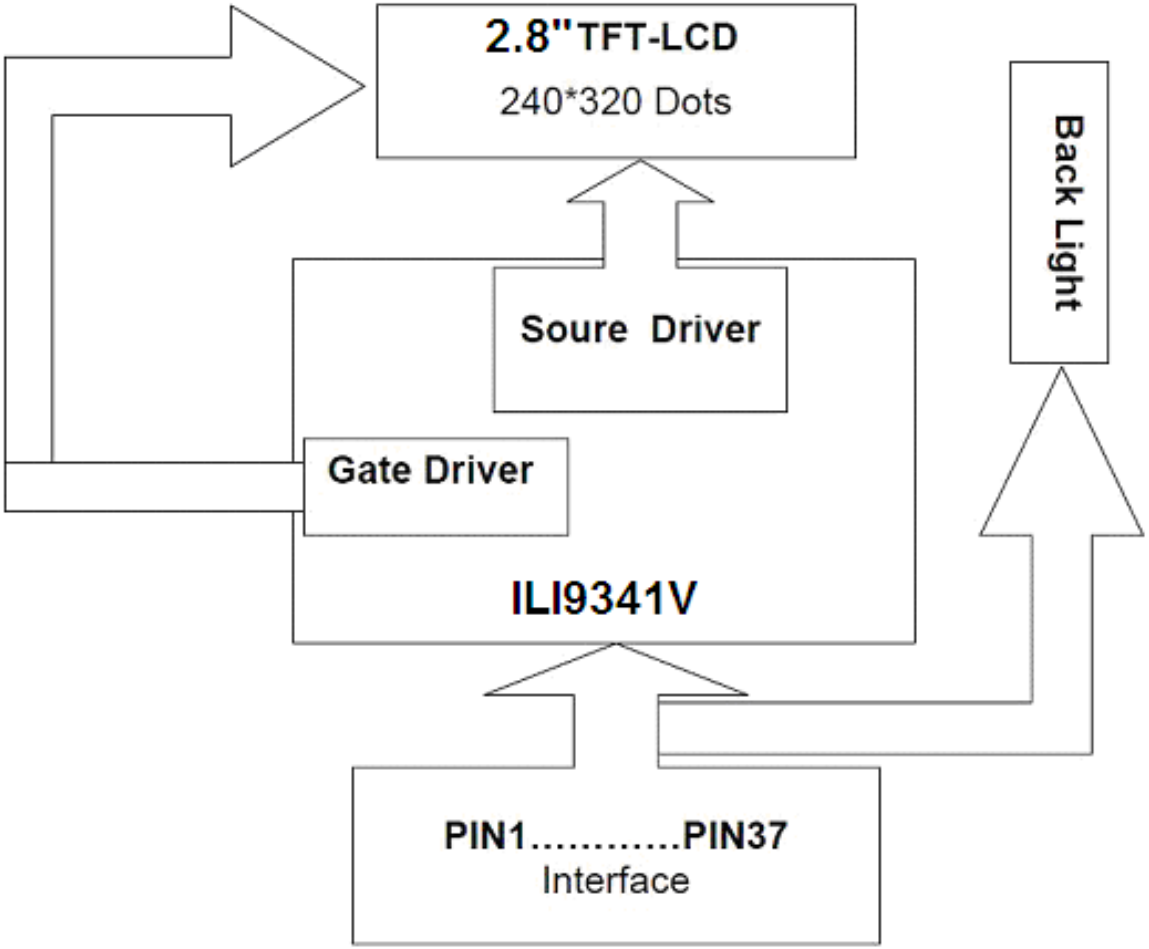

12.Reliability

Content of Reliability Test (Wide temperature, -20℃~70℃)

Environmental Test			
Test Item	**Content of Test**	**Test Condition**	**Note**
High Temperature storage	Endurance test applying the high storage temperature for a long time.	80℃ 96hrs	2
Low Temperature storage	Endurance test applying the low storage temperature for a long time.	-30℃ 96hrs	1,2
High Temperature Operation	Endurance test applying the electric stress (Voltage & Current) and the thermal stress to the element for a long time.	70℃ 96hrs	——
Low Temperature Operation	Endurance test applying the electric stress under low temperature for a long time.	-20℃ 96hrs	1
High Temperature/ Humidity Operation	The module should be allowed to stand at 40 ℃,90%RH max	40℃,90%RH 96hrs	1,2
Thermal shock resistance	The sample should be allowed stand the following 10 cycles of operation -20℃ 25℃ 70℃ 30min 5min 30min 1 cycle	-20℃/70℃ 10 cycles	——
Vibration test	Endurance test applying the vibration during transportation and using.	Total fixed amplitude : 1.5mm Vibration Frequency : 10~55Hz One cycle 60 seconds to 3 directions of X,Y,Z for Each 15 minutes	3
Static electricity test	Endurance test applying the electric stress to the terminal.	VS=±600V(contact), ±800v(air), RS=330Ω CS=150pF 10 times	——

Note1: No dew condensation to be observed.

Note2: The function test shall be conducted after 4 hours storage at the normal Temperature and humidity after remove from the test chamber.

Note3: The packing have to including into the vibration testing.

13.Contour Drawing

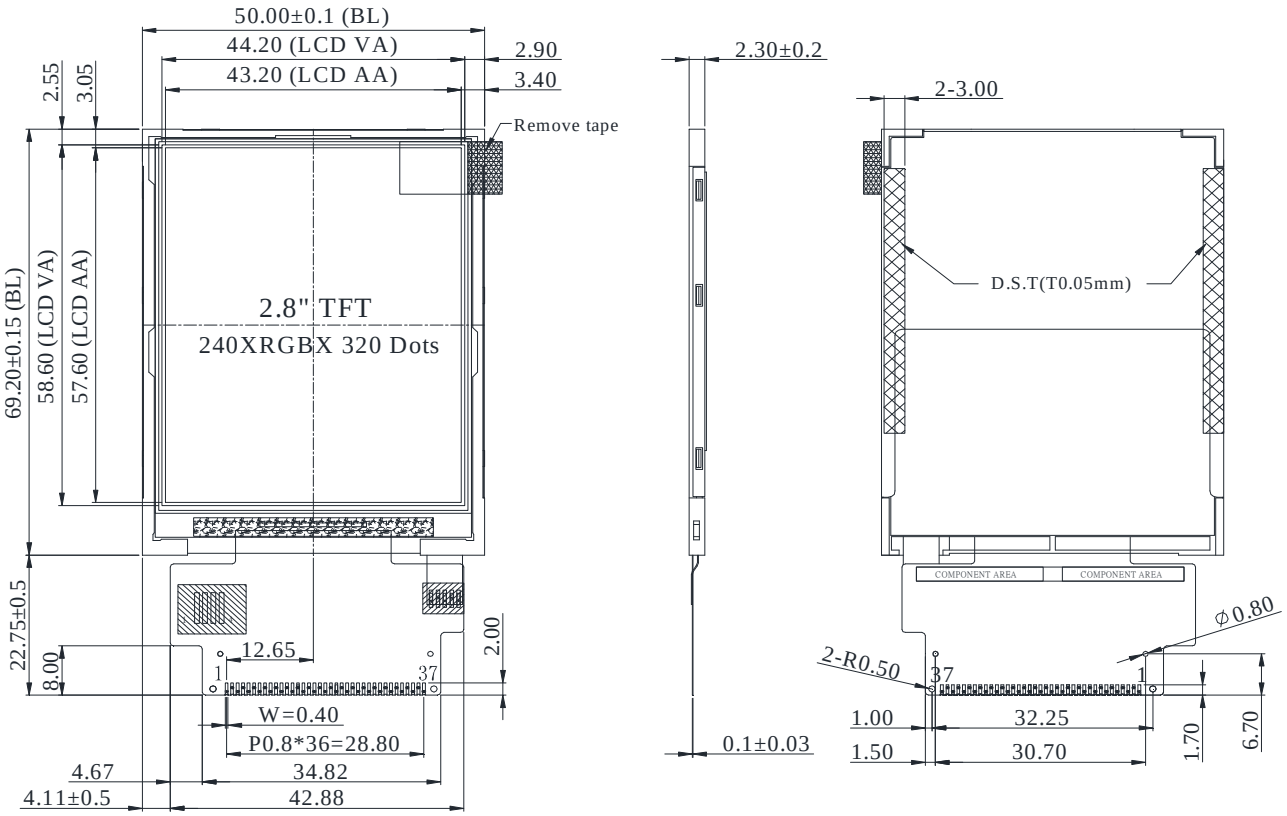

PIN NO.	SYMBOL
1	DB8
2	DB9
3	DB10
4	DB11
5	GND
6	IOVCC
7	/CS
8	RS
9	/WR
10	/RD
11	GND
12	NC
13	NC
14	NC
15	NC
16	LED-A
17	LED-K1
18	LED-K2
19	LED-K3
20	LED-K4

PIN NO.	SYMBOL
21	IMO
22	DB12
23	DB0
24	DB1
25	DB2
26	DB3
27	DB4
28	DB5
29	DB6
30	DB7
31	/RESET
32	VCI
33	VCI
34	GND
35	DB13
36	DB14
37	DB15

The non-specified tolerance of dimension is ±0.3 mm .

winstar

LCM Sample Estimate Feedback Sheet

Module Number：_____ **Page: 1**

1、Panel Specification：

1. Panel Type： □ Pass □ NG ,_____
2. View Direction： □ Pass □ NG ,_____
3. Numbers of Dots： □ Pass □ NG ,_____
4. View Area： □ Pass □ NG ,_____
5. Active Area： □ Pass □ NG ,_____
6. Operating Temperature： □ Pass □ NG ,_____
7. Storage Temperature： □ Pass □ NG ,_____
8. Others：_____

2、Mechanical Specification：

1. PCB Size： □ Pass □ NG ,_____
2. Frame Size： □ Pass □ NG ,_____
3. Material of Frame： □ Pass □ NG ,_____
4. Connector Position： □ Pass □ NG ,_____
5. Fix Hole Position： □ Pass □ NG ,_____
6. Backlight Position： □ Pass □ NG ,_____
7. Thickness of PCB： □ Pass □ NG ,_____
8. Height of Frame to PCB： □ Pass □ NG ,_____
9. Height of Module： □ Pass □ NG ,_____
10. Others： □ Pass □ NG ,_____

3、Relative Hole Size：

1. Pitch of Connector： □ Pass □ NG ,_____
2. Hole size of Connector： □ Pass □ NG ,_____
3. Mounting Hole size： □ Pass □ NG ,_____
4. Mounting Hole Type： □ Pass □ NG ,_____
5. Others： □ Pass □ NG ,_____

4、Backlight Specification：

1. B/L Type： □ Pass □ NG ,_____
2. B/L Color： □ Pass □ NG ,_____
3. B/L Driving Voltage (Reference for LED Type)： □ Pass □ NG ,_____
4. B/L Driving Current： □ Pass □ NG ,_____
5. Brightness of B/L： □ Pass □ NG ,_____
6. B/L Solder Method： □ Pass □ NG ,_____
7. Others： □ Pass □ NG ,_____

>> **Go to page 2** <<

5、Electronic Characteristics of Module：

1. Input Voltage： □ Pass □ NG ,_____
2. Supply Current： □ Pass □ NG ,_____
3. Driving Voltage for LCD： □ Pass □ NG ,_____
4. Contrast for LCD： □ Pass □ NG ,_____
5. B/L Driving Method： □ Pass □ NG ,_____
6. Negative Voltage Output： □ Pass □ NG ,_____
7. Interface Function： □ Pass □ NG ,_____
8. LCD Uniformity： □ Pass □ NG ,_____
9. ESD test： □ Pass □ NG ,_____
10. Others： □ Pass □ NG ,_____

6、Summary：

Sales signature：_____

Customer Signature：_____ **Date**：_____/_____/_____